Index No.	Part No.		Description
1.	**54-861063-XXX		Table Top
2.	**54-861012-002		Leg (Qty. 2) - Rosewood
3.	11-052023-001		Flat Washer (M6)
4.	11-053784-001	N.A.	Pan Head C.R. Screw (M6 x 40 mm)
5.	54-861071-000		Round Glide (Qty. 6)
6.	11-111560-000		Concrete Anchor (3/8-16 x 1-9/16")
7.	11-001360-001	N.A.	Hex Head Cap Screw (3/8-16 x 4-1/2")
8.	11-191014-001		Flat Washer (3/8)
9.	54-861010-000		Floor Mounting Hardware Pkg.
10.	*54-861056-000		Coffee Table Hardware Pkg. (includes index numbers 3,4 & 5)

N.A. = No Longer Available

NOTE : Last three digits in part number (suffix) designate color.

* Not Illustrated

**Color Chart

-002	MAPLE
-004	ROSEWOOD
-005	BLACK

Striking Coffee Table

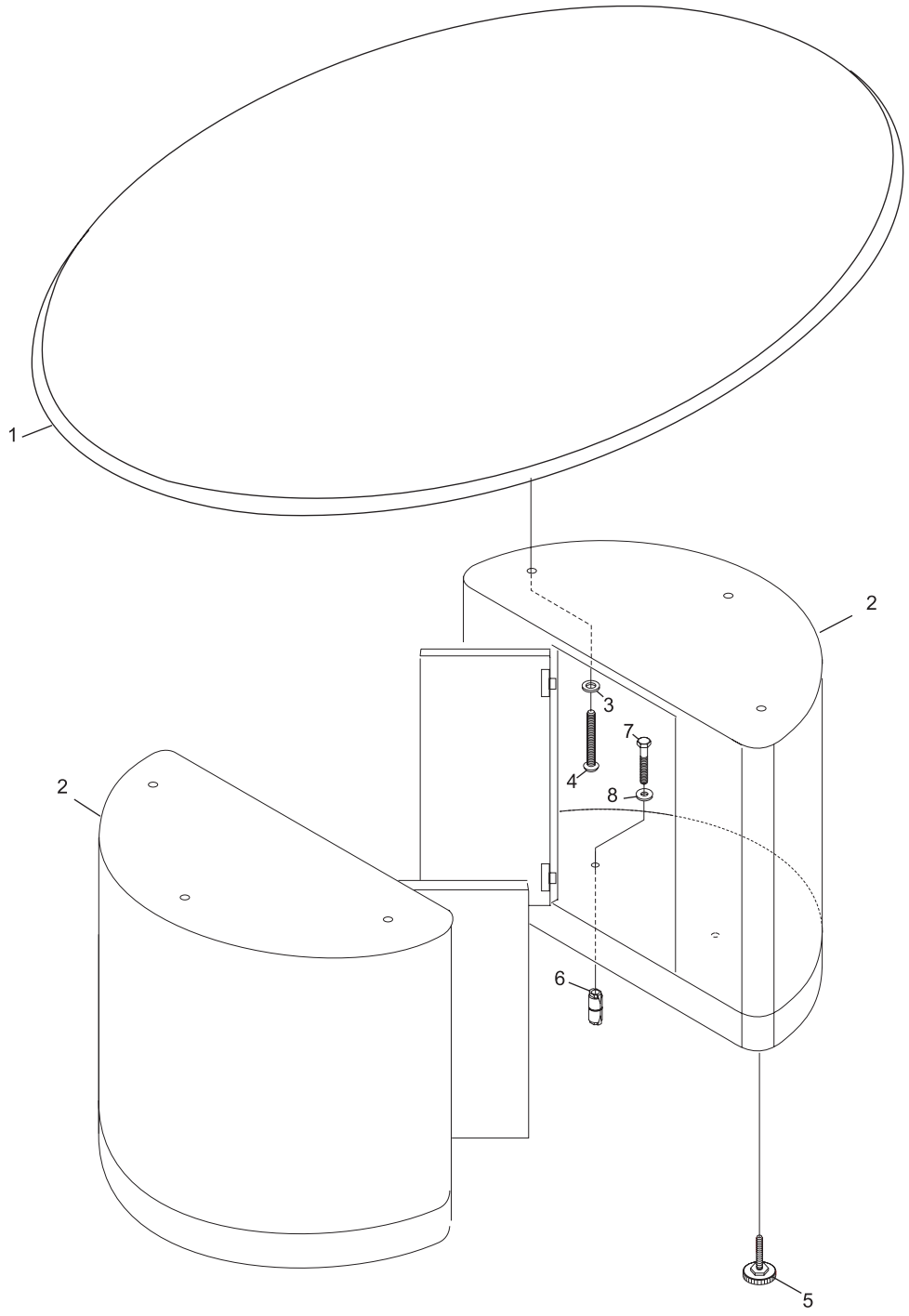

Striking Coffee Table