Index No.	Part No.		Description
1.	47-080201-001	N.A.	Front Frame Support
2.	47-142613-000I	N.A.	solation Mount Assembly (shipped as R.H. reconfigure for L.H. Isolation Mount Assembly use)
3.	N.A.		Mounting Bracket
4.	11-176001-001		Keps Nut (5/16-18)
5.	11-191012-001		Flat Washer (5/16)
6.	11-603025-000	N.A.	Vibration Mount
7.	11-001176-001	N.A.	Hex Machine Screw (1/4-20 x 3/8”)
8.	11-050901-001	N.A.	Locknut (M8)
9.	11-051010-001		Hex Head Cap Screw (M8 x 20)
10.	11-014144-001		Flat Head Screw (1/4-20 x 1/2”)
11.	47-142600-000	N.A.	Mounting Bracket

N.A. = No Longer Available

GS Consolidated Electronics Box Mounting

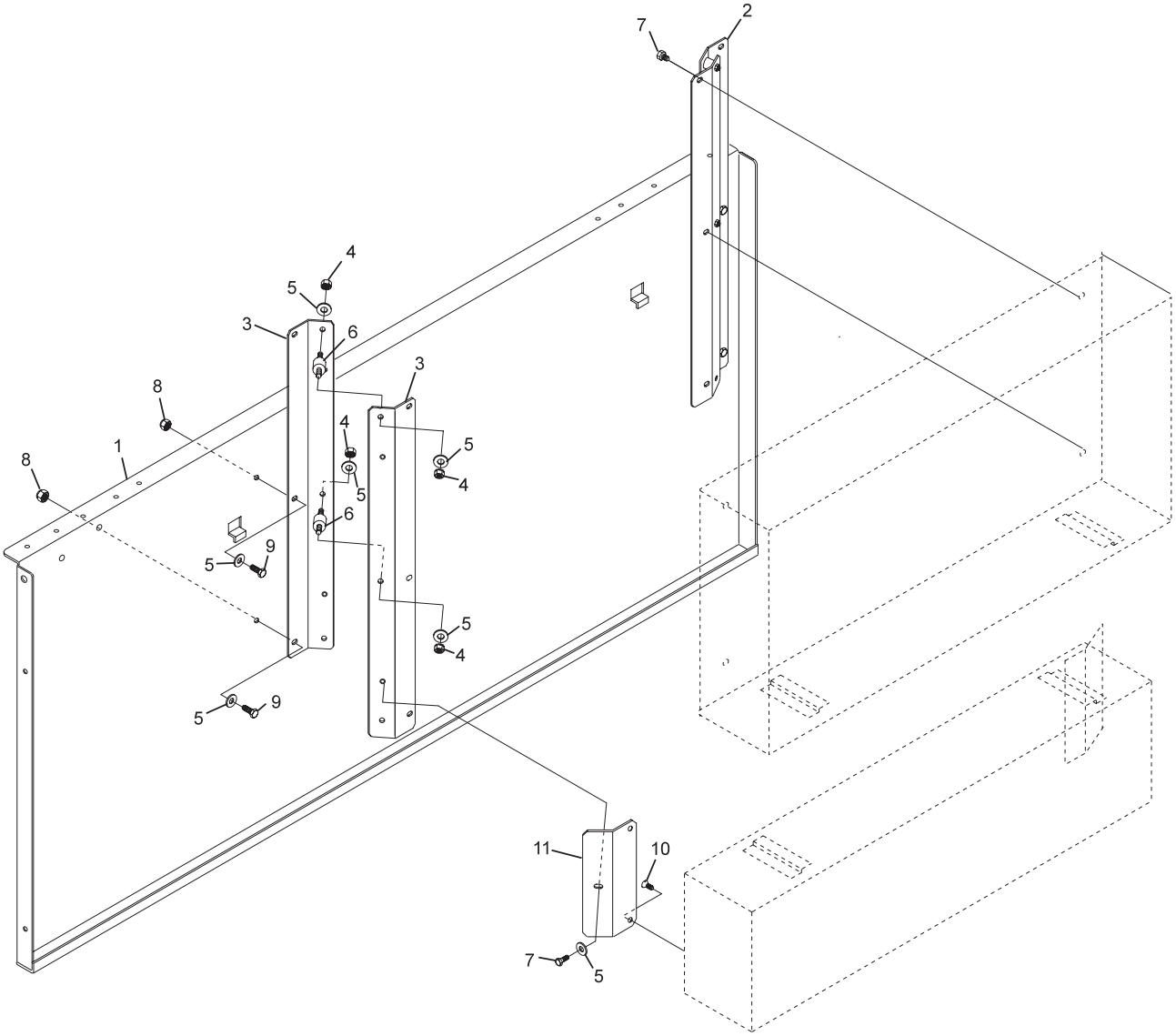

GS Consolidated Electronics Box Mounting